YD-40NSF-P-D (NEMA) 145TC)

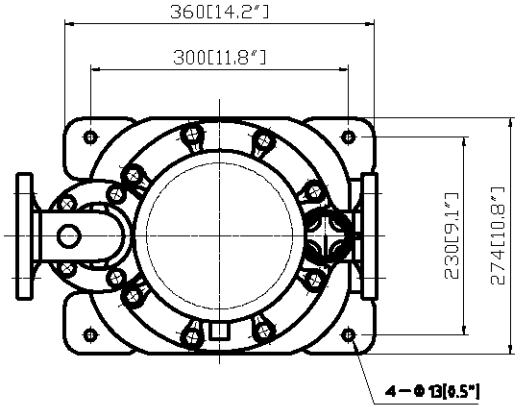
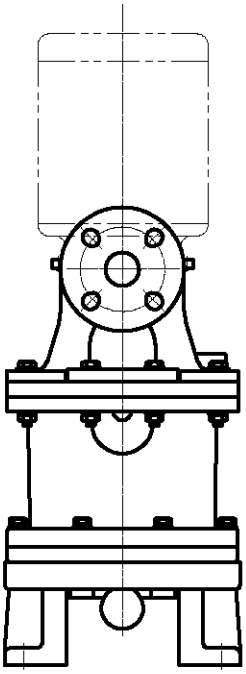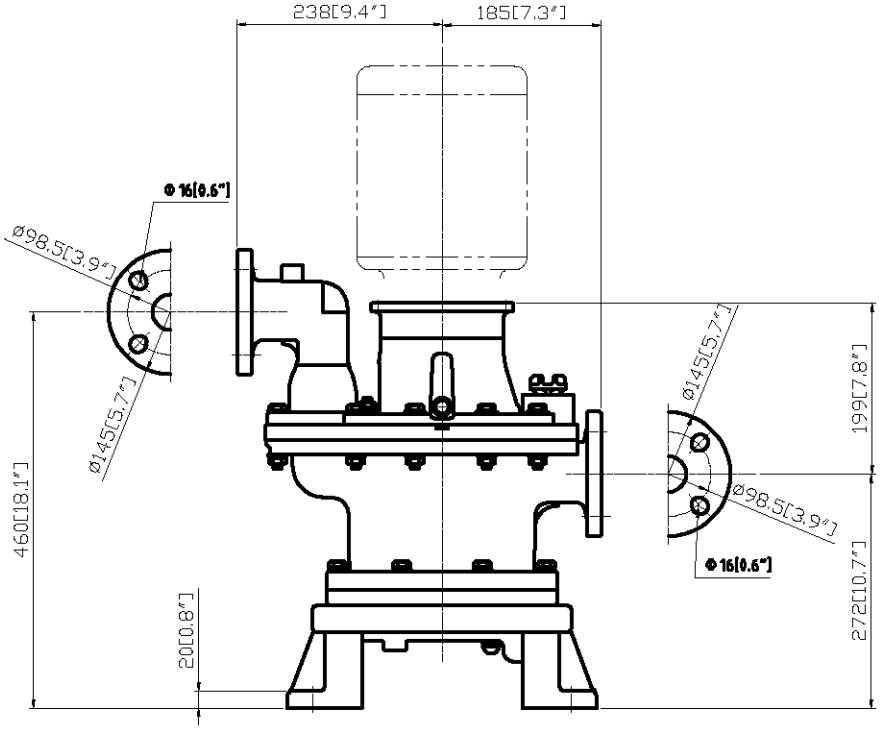
※Dimension varies depending on the motor size or bland.